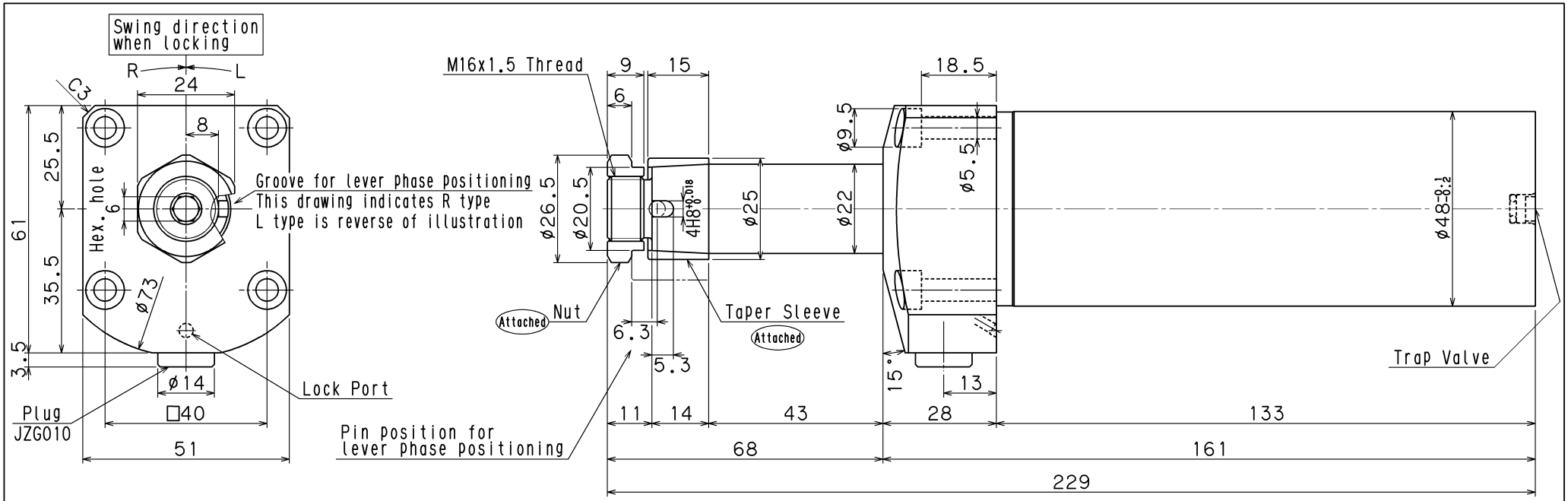

Model Coding

LG0481-C□-Z0020□

Design No.

Swing direction when locking
R:Clockwise
L:Counterclockwise

Specifications

Model	LG0481-C□-Z0020□	
Cylinder Area	7.540	cm²
Full Stroke	41	mm
Swing Stroke(90°)	11	mm
Locking Stroke	30	mm
Cylinder Volume	30.9	cm³
Return Spring Force	0.52~0.81	kN
Max.Operating Pressure	7.0	MPa
Min.Operating Pressure	2.5	MPa
Design Pressure	10.5	MPa
Operating Temperature	0~70	℃
Accuracy of 90°Swing Angle	90°±3°	
Accuracy of final position after repeating locking swing	±0.5°	

Special description

•Locking stroke 30mm

Remarks

1. This drawing indicates R type released position.
2. Regarding clamp operation time, please adjust 90°Swing time depending on moment of lever inertia. (Refer to 90°Swing time graph.)
3. Clamping force changes according to clamp lever. Use with proper pressure for the length. (Refer to Performance curve.)
4. The groove for lever phase positioning is set to come on the hydraulic port side at the time of lock. When using lever phase positioning, processing of Pin and Lever for phase positioning should be prepared by customer.
5. The recommended main oil passage internal diameter is ø6mm or more. (However, please make the lock port connection part ø3mm.)

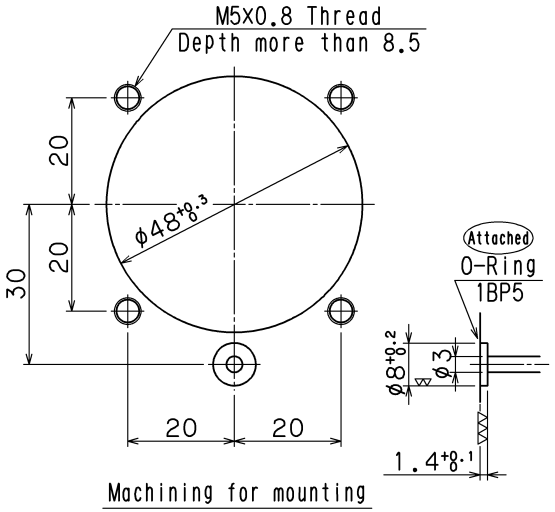

Machining for mounting

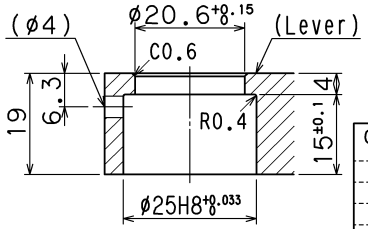

Processing drawing of mounting the lever

CAREER	SCALE	2016/03/28	2016/03/28	2016/03/28	NAME
	1/1	H.Yokota	K.Ohtani	R.Wada	LG0481-C□-Z0020□ SWING CLAMP
	KOSMEK®				DWG.NO 3L04014-E1