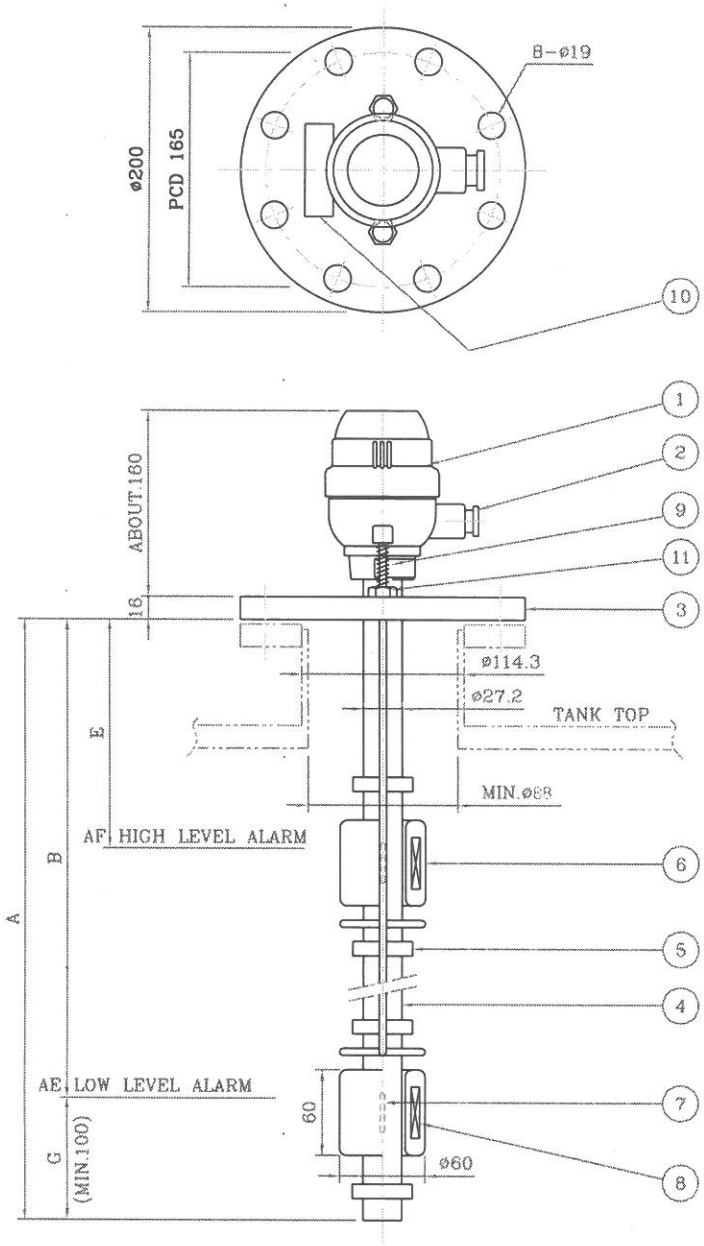

※ TESTING DEVICE

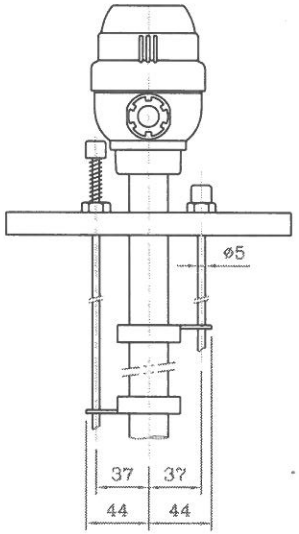

NO.	PART NAME	MAT'L	Q'TY	REM'S
11	TESTING DEVICE	SUS304 BsBM	2	
10	USE NAME PLATE	SUS304	1	
9	NAME PLATE	TETRON FILM	1	
8	MAGNET		2 SETS	
7	REED SWITCH		2 SETS	50VA
6	FLOAT	SYNTHETIC RUBBER	2	
5	FLOAT STOPPER	SUS304	4	
4	GUIDE PIPE	SUS304	1	
3	FLANGE	SS400	1	JIS 5K 100A
2	CABLE GLAND	AC BsBM	1	
1	TERMINAL BOX	AC	1	

REV.	DESCRIPTION	DATE	CHK.	APP.

SPEC.
TYPE : LS-TM-2FT-100A
CONTACT CAP. : 50VA
MAX. TEMP. : 120°C
ENCLOSURE : IP67

WT.	SCALE	1/5	DATE MAR. 2000
	DWG.	DSG.	CHK. APP.
DWG. SZ.			
A4	TITLE	LEVEL SWITCH	
DAEHWA ENGINEERING	DWG.NO.	DX007S-2FTn	