[illegible]ntal
[illegible]

BG50-BG50Z

BG50-BG50Z
Stand 29.10.2015 / df

[illegible] отверстиями

Code -11/

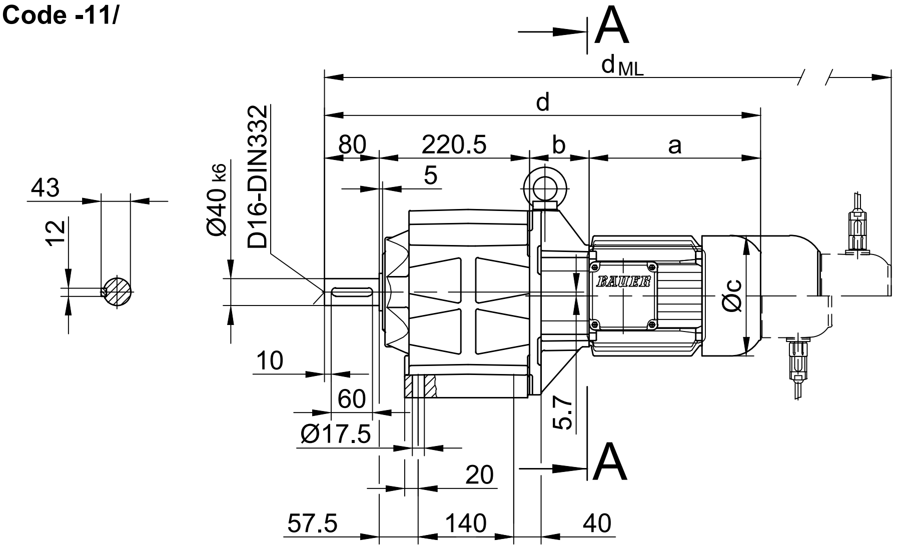
A
A
dML
d
80
220.5
b
a
5
43
12
Ø40 k6
D16-DIN332
Øc
10
60
Ø17.5
5.7
20
57.5
140
40

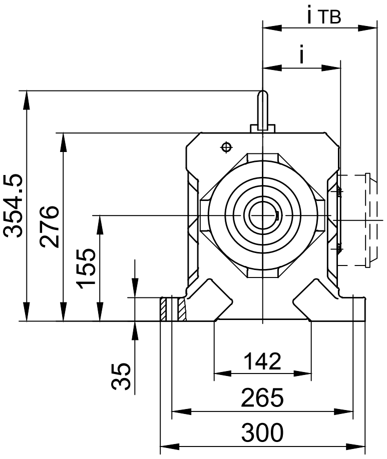
i TB
i
354.5
276
155
35
142
265
300

[illegible]

Code -37/
(Code -27/)

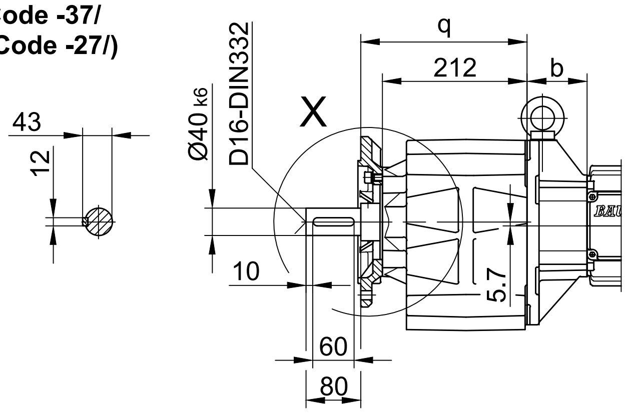
43
12
Ø40 k6
D16-DIN332
X
q
212
b
10
5.7
60
80

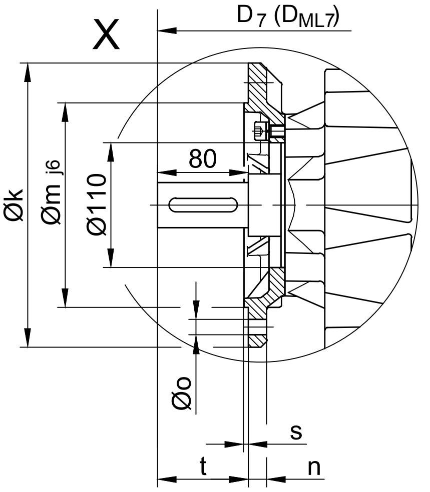
X
D7 (DML7)
Øk
Øm j6
Ø110
80
Øo
s
t
n

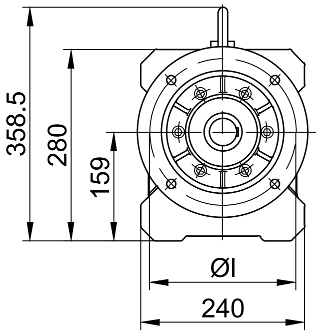
358.5
280
159
Øl
240

[illegible]

BG50(Z)	k	l	m	n	o	q	s	t	D_7	D_{ML7}
[illegible] -37/	250	215	180	16	13.5	244	4	80	d+23.5	d_{ML}+23.5
[illegible]-27/	200	165	130	12	11	241	3.5	83	d+23.5	d_{ML}+23.5

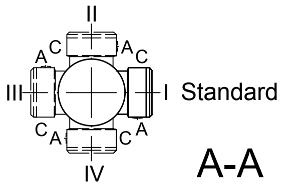
II
A C
A C
III
I Standard
C A
C A
IV
A-A

[illegible]	a	b	c	d	i	i_{TB}	[illegible]			
							E../ES..	G	E../ES..-G	RR/RL
							d_{ML}	d_{ML}	d_{ML}	d_{ML}
BG50Z-../D05..	170	155	123	625.5	100	117	667.5	728.5	771	-
BG50Z-../D06..	170	155	123	625.5	100	119	667.5	728.5	771	-
BG50Z-../D07..	190	155	123	645.5	100	119	687.5	748.5	769	-
BG50-../D..08..	200	73	156	573.5	115	136.5	639.5	680.5	746	639.5
BG50Z-../D..08..	200	159	156	659.5	115	136.5	725.5	766.5	832	725.5
BG50-../D..09..	251	87.5	181	639	124	158	732	746	833	732
BG50Z-../D..09..	251	173.5	181	725	124	158	818	832	919	818
BG50-../D..11..	319	94	228	713.5	181	181	811.5	820.5	917	811.5
BG50-../D..13..	393	107	258	800.5	218	218	911.5	907.5	1006	911.5
BG50-../D..16..	454.5	121	310	876	244	244	1019.5	983	1123.5	1019.5
BG50-../D..18..	542	143	348	985.5	288	288	1135	1092.5	1239	1135

THE GEAR MOTOR SPECIALIST

[illegible]

[illegible] рстиями

Code -71/

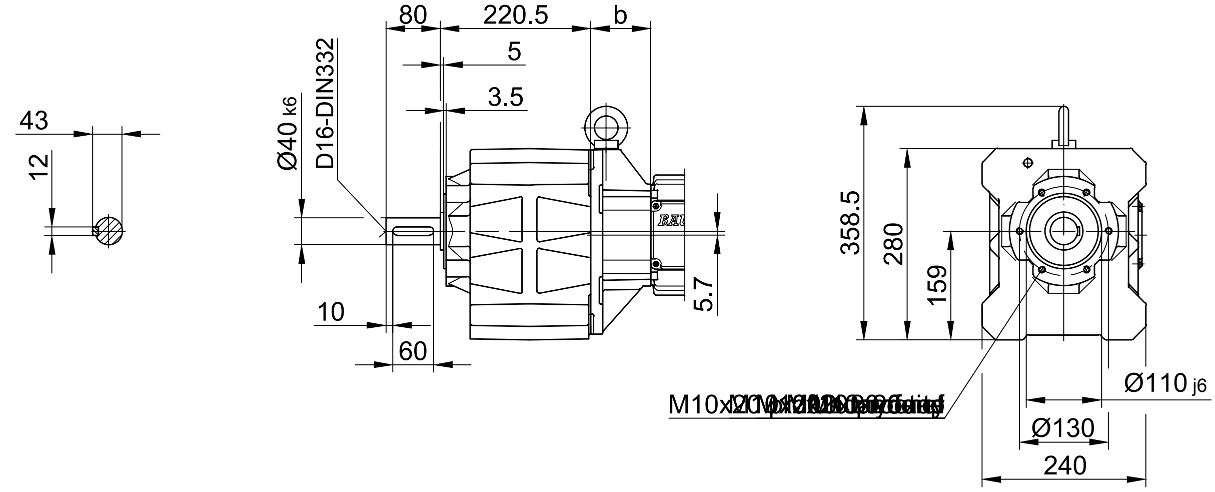
43
12
Ø40 k6
D16-DIN332
80
220.5
b
5
3.5
10
60
5.7
358.5
280
159
M10x20 [illegible]
Ø110 j6
Ø130
240

[illegible]

Code -61LR/

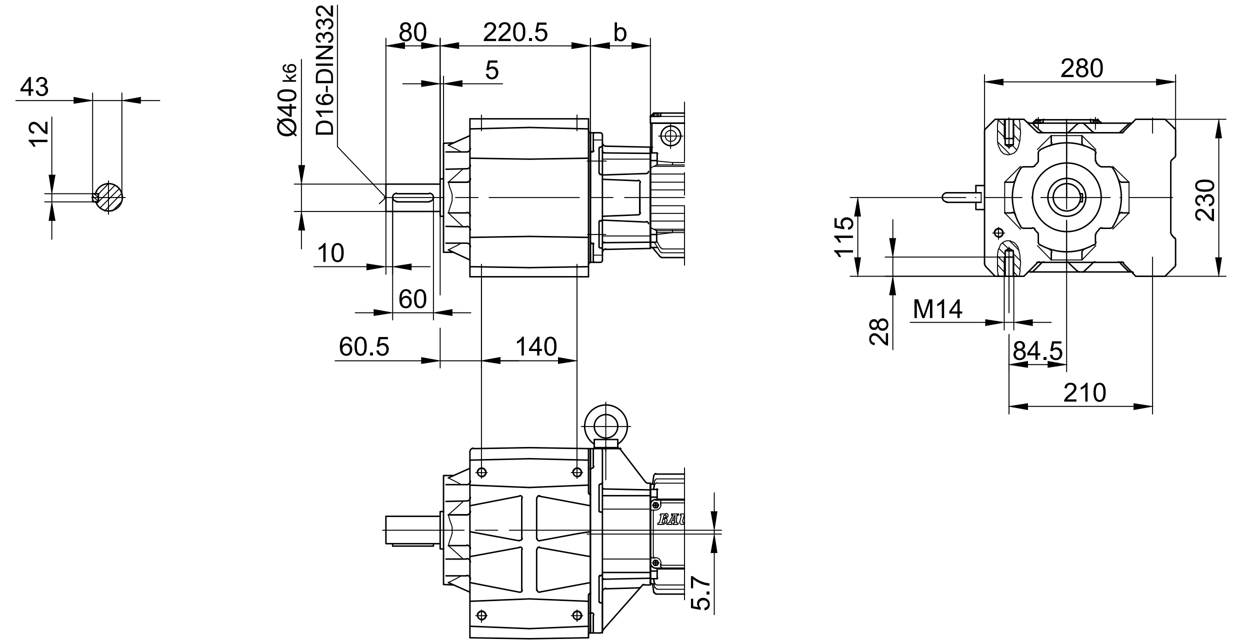
43
12
Ø40 k6
D16-DIN332
80
220.5
b
5
10
60
60.5
140
5.7
280
230
115
28
M14
84.5
210